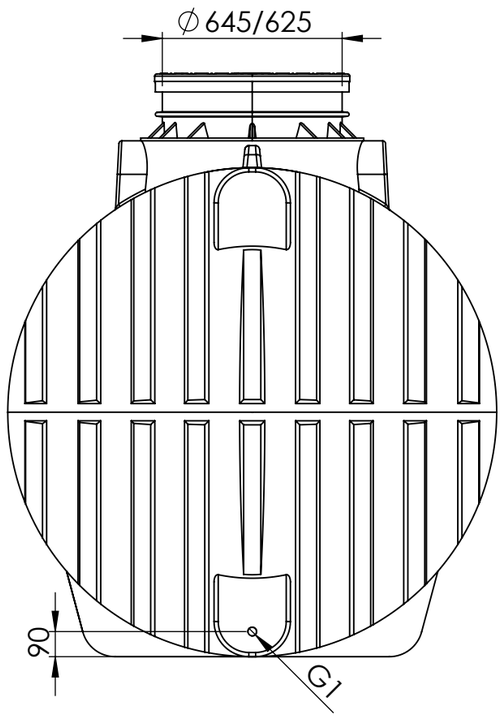

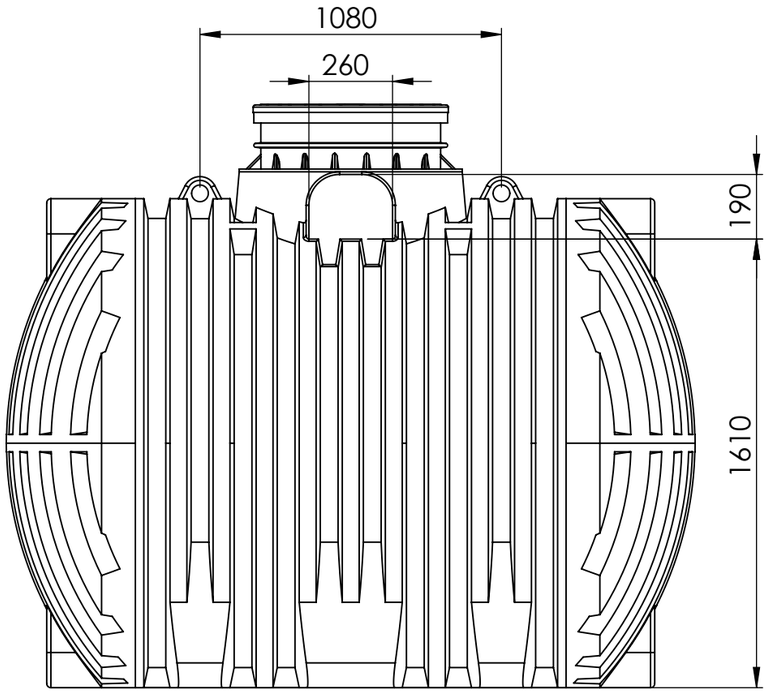

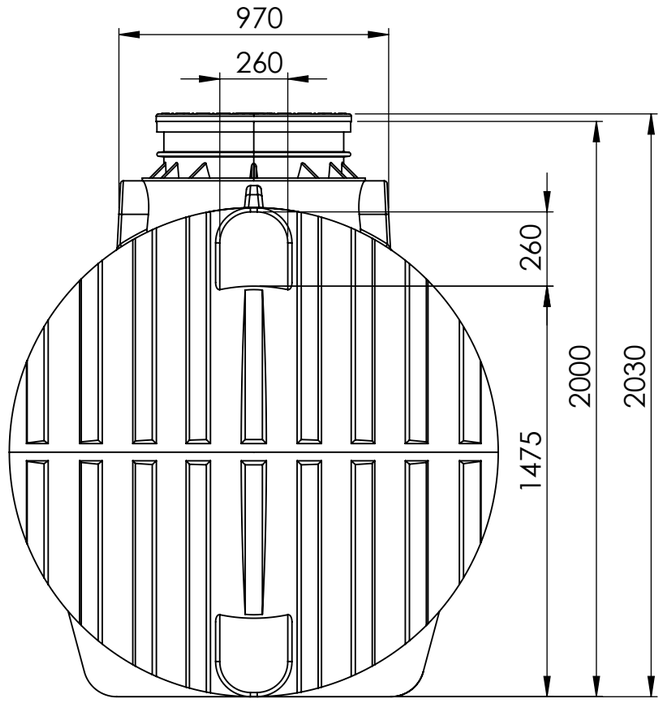

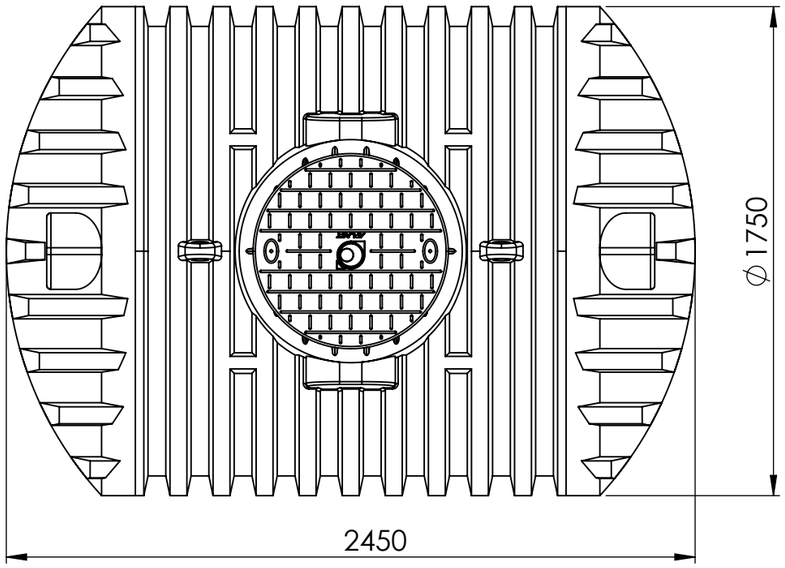

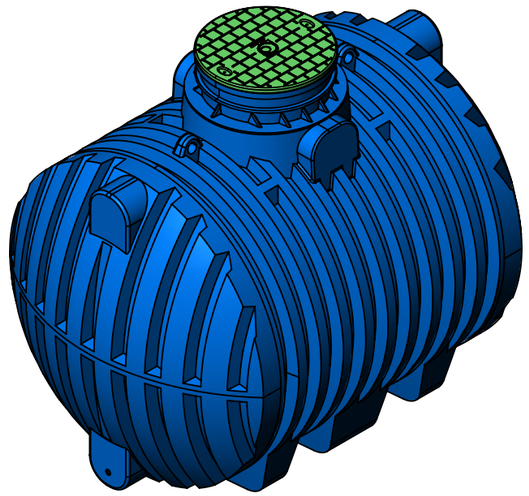

Tolerance: ±3%

ENOTA DIMENZIJ: mm			MERILO:	MATERIAL: HD PE	VOLUMEN:	MASA: **215kg**
	DATUM	IME	NAZIV			
IZDEL.	2. 07. 2020	M. Hrovat	AQUAstay 5.000l - XL			
POTRDIL	2. 07. 2020	S. Rašević				

REVISIONS				
ZONE	REV.	DESCRIPTION	DATE	APPROVED

Risba je last APLAST d.o.o..Vsaka zloraba te risbe, rezmnoževanje, prodaja tretji osebi ali uporaba v drugacne namene kot je bilo dogovorjeno, je prepovedana !
This drawing is the property of APLAST d.o.o. and must not , without our consent be copied, handed to other persons or otherwise misused!

APLAST
http://www.aplast.si

IDENT/DRAWING NUMBER
214310140

A3